Core arrangement

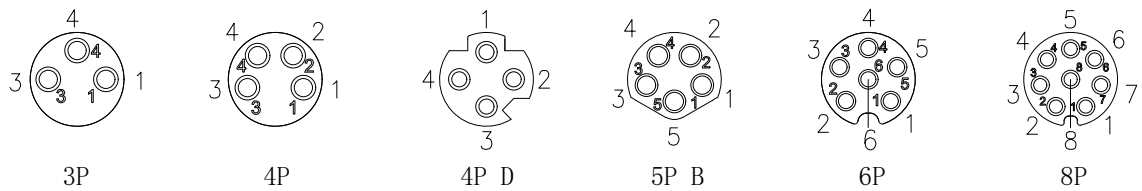

Number of cores	3	4	4D	5B	6	8
Rated current/ voltage	3A/60V	3A/60V	4A/60V	3A/30V	1.5A/30V	1.5A/30V
Rated pulse voltage	800V	800V	800V	800V	800V	800V
Insulation resistance (MΩ)	≥500	≥500	≥500	≥500	≥500	≥500
Contact resistance (MΩ)	≤ 5	≤ 5	≤ 5	≤ 5	≤ 5	≤ 5

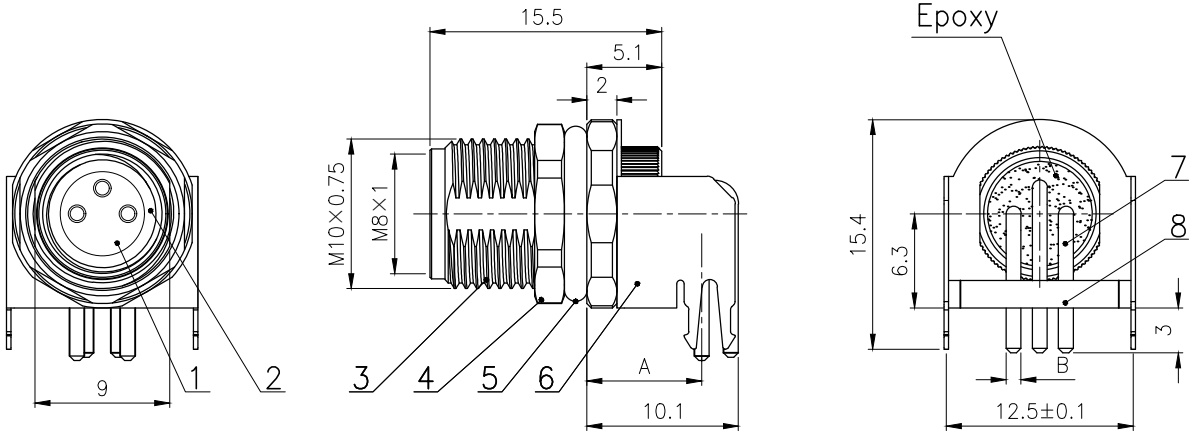

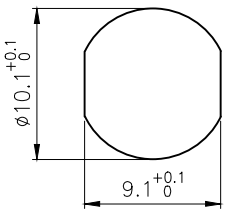

BOARD END HOLE OPENING SIZE

A:
2~5P: 7.68mm
6P: 6.48mm
8P: 6.15mm

B:
2~5P: ø1mm
6~8P: ø0.6mm

RECOMMENDED P.C.B LAYOUT

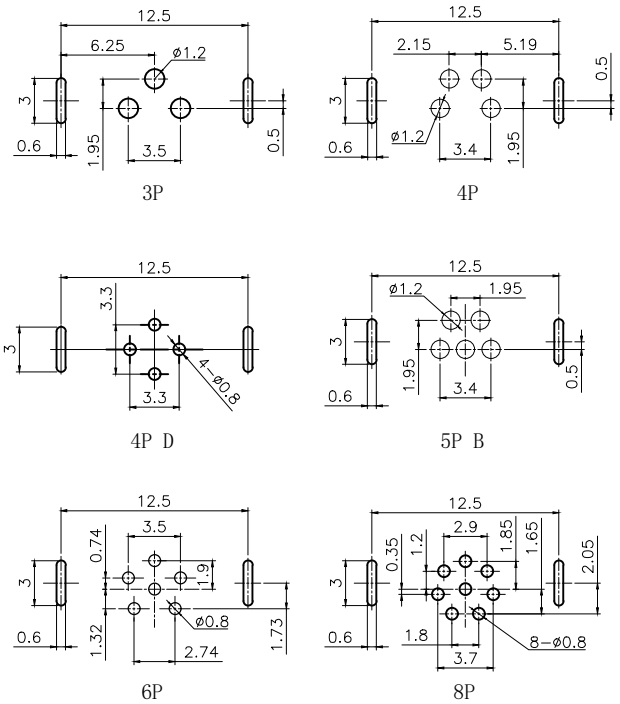

No.	Specification	Material	Treat	Unit	Q'ty
8	M8 bending sent female positioning plate	LCP	/	pc	1
7	M8 Bending type Female contact pin	Phosphor copper	Gold plated	pc	3~8
6	M8 90 degree clasp shielded enclosure	Brass	Nickel plated	pc	1
5	M8 Shell O ring ø10Xø7X1.5	NBR	/	pc	1
4	Hexagon nut M10X0.75	Brass	Nickel plated	pc	1
3	M8 Bending type Panel back mount Female socket shell	Brass	Nickel plated	pc	1
2	M8 O ring ø7Xø5.4X0.8	NBR	/	pc	1
1	M8 Female Insulator	Nylon	/	pc	1

GENERAL TOLERANCE (UNLESS SPECIFIED)

≤10	±0.1
<10~≤20	±0.2
<20~≤50	±0.5
Angle	±3°

THIRD ANGLE

DWN		CAZN 正成
CHK		
APVD		TITLE M8-L-Sx
UNIT MM	REV A	PART NO
SIZE A4	SHEET 1 OF 1	DRAWING NO